Datasheet

QSR 160-18 Semi-Automatic Tool Changer

Item number: 0212959

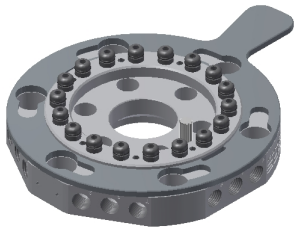

Technical data

Description	Unit	Value
Weight, max.	oz	73.44
Weight, min.	oz	73.44
Weight	oz	0.090
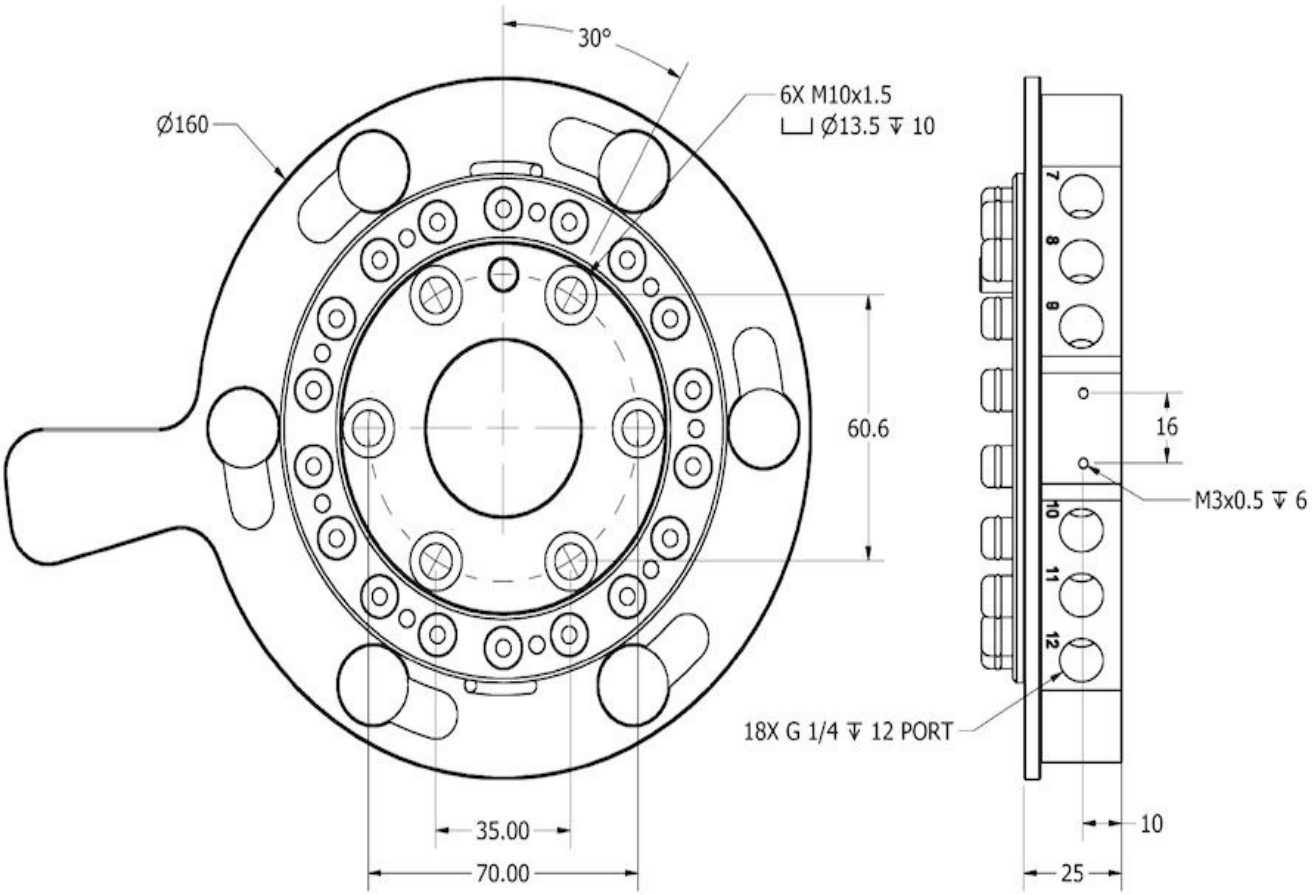
Dimensional drawings